View product details on medias

12.06.2026, 04:03:56 UTC

SCHAEFFLER

FAG

32064-X-XL

Tapered roller bearing

Tapered roller bearings 320, main dimensions acc. to DIN 720, separable

X-life

Technical information

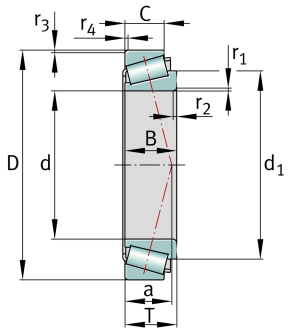

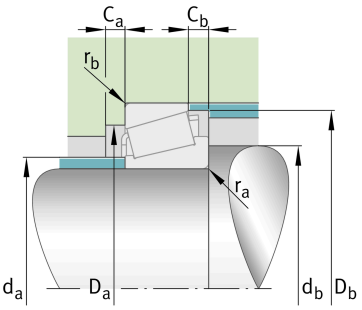

Your current product variant

Tolerance class	PN	Normal (ISO 492:2023)
Heat treatment	Standard	
Cage	Standard	Sheet steel cage, window cage, roller-guided
Internal design	Standard	
Quality level	XL	X-life
Number of rows	1	Single-row design

Main Dimensions & Performance Data

d	320 mm	Bore diameter
D	480 mm	Outside diameter
B	100 mm	Width, inner ring
C	74 mm	Width, outer ring
T	100 mm	Width, total
C_r	1,850,000 N	Basic dynamic load rating, radial
C_{0r}	3,050,000 N	Basic static load rating, radial
C_{ur}	355,000 N	Fatigue load limit, radial
n_G	1,580 1/min	Limiting speed
$n_{\vartheta r}$	690 1/min	Thermal speed rating
≈m	60.7 kg	Weight

The data sheet only contains an overview of the technical data of the selected product. Please refer to the additional documentation for this product. For further information, please use the following link on our website: Contact form

Mounting dimensions

$d_{a\ max}$	350 mm	Maximum diameter of shaft shoulder
$d_{b\ min}$	338 mm	Minimum diameter of shaft shoulder
$D_{a\ min}$	424 mm	Minimum diameter of housing shoulder
$D_{a\ max}$	462 mm	Maximum diameter of housing shoulder
$D_{b\ min}$	461 mm	Minimum diameter of housing shoulder
$C_{a\ min}$	15 mm	Minimum axial space
$C_{b\ min}$	26 mm	Minimum axial space
$r_{a\ max}$	5 mm	Maximum fillet radius of shaft
$r_{b\ max}$	4 mm	Maximum fillet radius of housing

Dimensions

$r_{1,\ 2\ min}$	5 mm	Minimum chamfer dimension of inner ring back face
$r_{3,\ 4\ min}$	4 mm	Minimum chamfer dimension of outer ring back face
a	104 mm	Distance between the apexes of the pressure cones
d_1	398.5 mm	Guidance rib diameter of inner ring

Temperature range

T_{min}	-30 °C	Operating temperature min.
T_{max}	200 °C	Operating temperature max.

Calculation factors

e	0.46	Limiting value of Fa/Fr for the applicability of diff. Values of factors X and Y
Y	1.31	Dynamic axial load factor
Y_0	0.72	Static axial load factor

Additional information

	T4GD320	Comparative designation to ISO 10317 and ISO 355

The data sheet only contains an overview of the technical data of the selected product. Please refer to the additional documentation for this product. For further information, please use the following link on our website: Contact form

Characteristics

- Radial load
- Axial load in one direction
- Grease Lubrication
- Oil Lubrication
- Not sealed
- Large bearing

The data sheet only contains an overview of the technical data of the selected product. Please refer to the additional documentation for this product. For further information, please use the following link on our website: Contact form